ITEM NO.	PART NO.	DESCRIPTION	QTY.	MATERIAL
1	WD39-W	VALVE BOX COVER	1	ASTM A536 65-45-12 DUCTILE IRON
2	SSHP-1	HINGE PIN	1	AISI 304
3	VBB-5	5" NOM. VALVE BOOT	1	ABS
4	BRP5-X	BASE RISER PIPE	1	PVC
5	WD253	WD82, TYPE A ADJUSTMENT RING ASSEMBLY	1	
6	WD82C	UPPER CASING	1	ASTM A536 65-45-12 DUCTILE IRON
7	WD190	CENTERING DISK	1	
8	WD116	WD82 STONE PLATE	1	
9	WD193	STONE COLLECTOR	1	

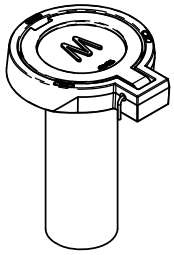

WD774 EXTENSION
(OPTIONAL)

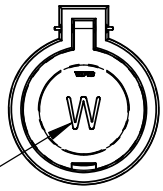

OPT. MARKING
W, G, S, P, F

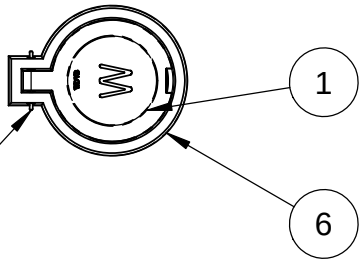

	OPTIONS
☐	"W" LID
☐	"G" LID
☐	"S" LID
☐	"P" LID
☐	"F" LID
☐	LOCKING LID

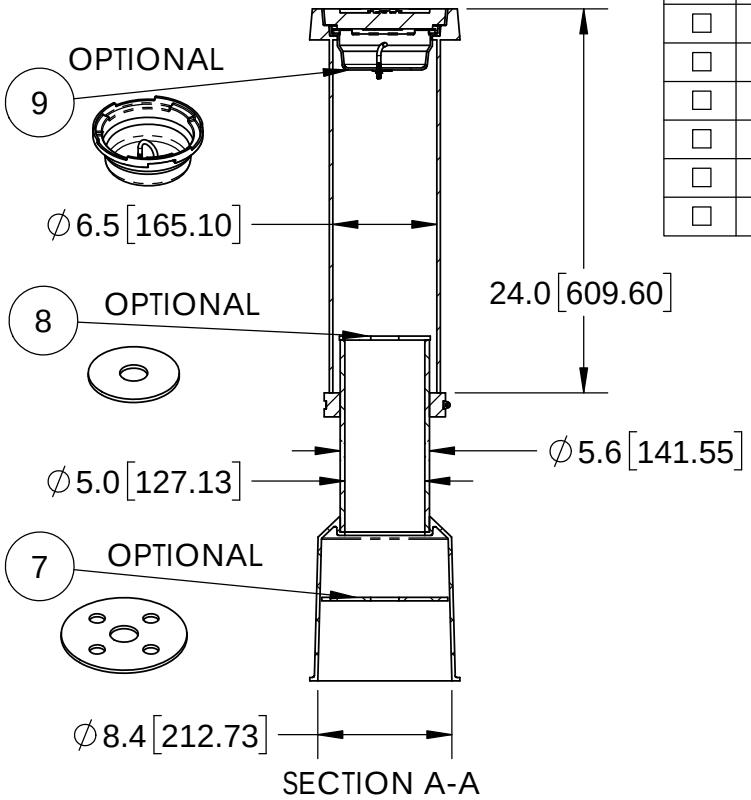

SECTION A-A

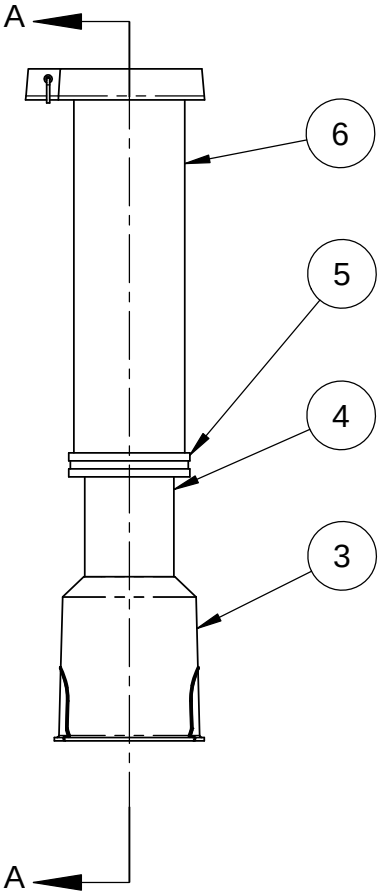

NOTES:

1. UPPER CASING AND LID FINISH IS BLACK BITUMINOUS ASPHALT CORROSION RESISTANT COATING.
2. BURY AS REQUIRED. UP TO 20'LGTH MAY BE SUPPLIED AS ONE PIECE.

REV.	DESCRIPTION	APPROVED	DATE
1	NOTES ADDED		APR 18/16
0	ISSUED FOR REVIEW		MAR 30/16

	NAME	DATE
DRAWN	MB	MAR 30/16
CHECKED		

TOLERANCES UNLESS SPECIFED

FRACTIONAL	± 1/32"
TWO PLACE DECIMAL	± .02"
THREE PLACE DECIMAL	± .002"
ANGULAR	± 1°
DIMENSIONS	INCHES

SCALE 1:12 SHEET 1 OF 1

WD Industrial Group
1036 Waverly Street
Winnipeg, Manitoba, Canada R3T 0P3
P 204 896 1333 F 204 896 6969

SIZE	DWG. NO.	REV.
A	WD82 Valve Box	1