MATERIAL:

1) FLANGE - DUCTILE IRON ASTM A536 GRADE 65-45-12
2) DRILLING - ANSI B16.1 125 C.I. FLANGES. ANSI B16.5 150 STL. FLANGES
3) GASKET - EPDM

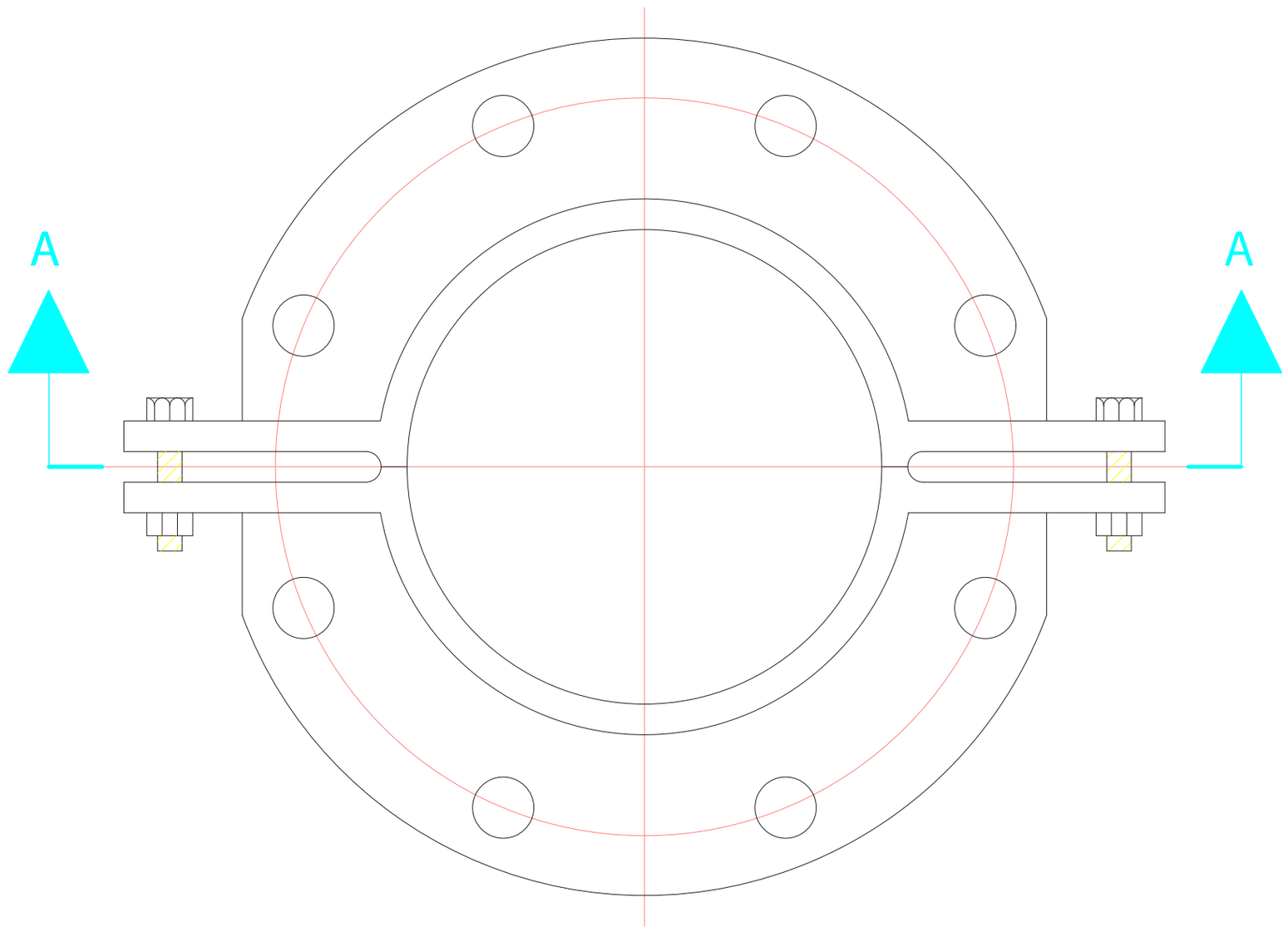

PLAN

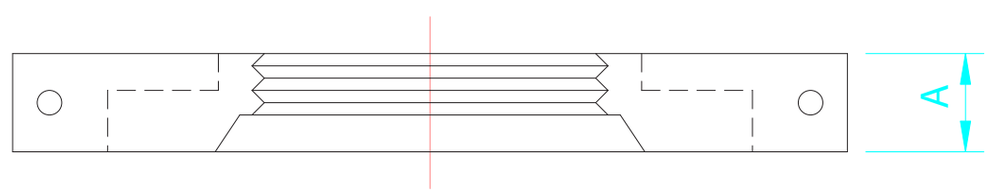

SECTION A-A

NOM. PIPE SIZE	PVC PIPE O.D.	FLG. O.D.	BOLT CIRCLE ÿ	FLANGE THICKNESS	BOLT HOLE ÿ	A	BOLTS	APPROX. WT. LBS.	WD PART NO.
6	6.90"	11.00"	9.50"	1.00"	0.875"	1.56"	8.75" x 3.25"	19	WD28

WD-900C FLANGE FOR USE WITH C900 PVC PIPE

Valve Boxes Ltd.
1036 Waverley Street
Winnipeg Manitoba Canada R3T 0P3
P 204 896 1333 F 204 896 6969

APP'D BY:	DATE:
WDP	08/06/02
SCALE: N.T.S.	REV. NO: 00
DWG. NO: FR-2	