ITEM NO.	PART NO.	DESCRIPTION	MATERIAL
1	WD89	TOP SOCKET	ASTM A536 65-45-12 DUCTILE IRON
2	WD39-W	VALVE BOX COVER	ASTM A536 65-45-12 DUCTILE IRON
3	SSHP-1	HINGE PIN	AISI 304
4	PI-6	PI 6" UPPER CASING BARREL	PP
5	VBB-5	5" NOM. VALVE BOOT	ABS
6	BRP5-X	BASE RISER PIPE	PVC
7	WD190	CENTERING DISK	
8	WD116	WD82 STONE PLATE	
9	WD193	STONE COLLECTOR	
10	WD253	WD82, TYPE A ADJUSTMENT RING ASSEMBLY	

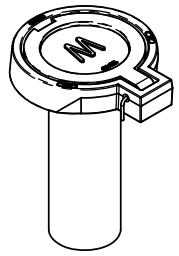

WD774 EXTENSION
(OPTIONAL)

	OPTIONS
☐	"W" LID
☐	"G" LID
☐	"S" LID
☐	"P" LID
☐	"F" LID
☐	LOCKING LID

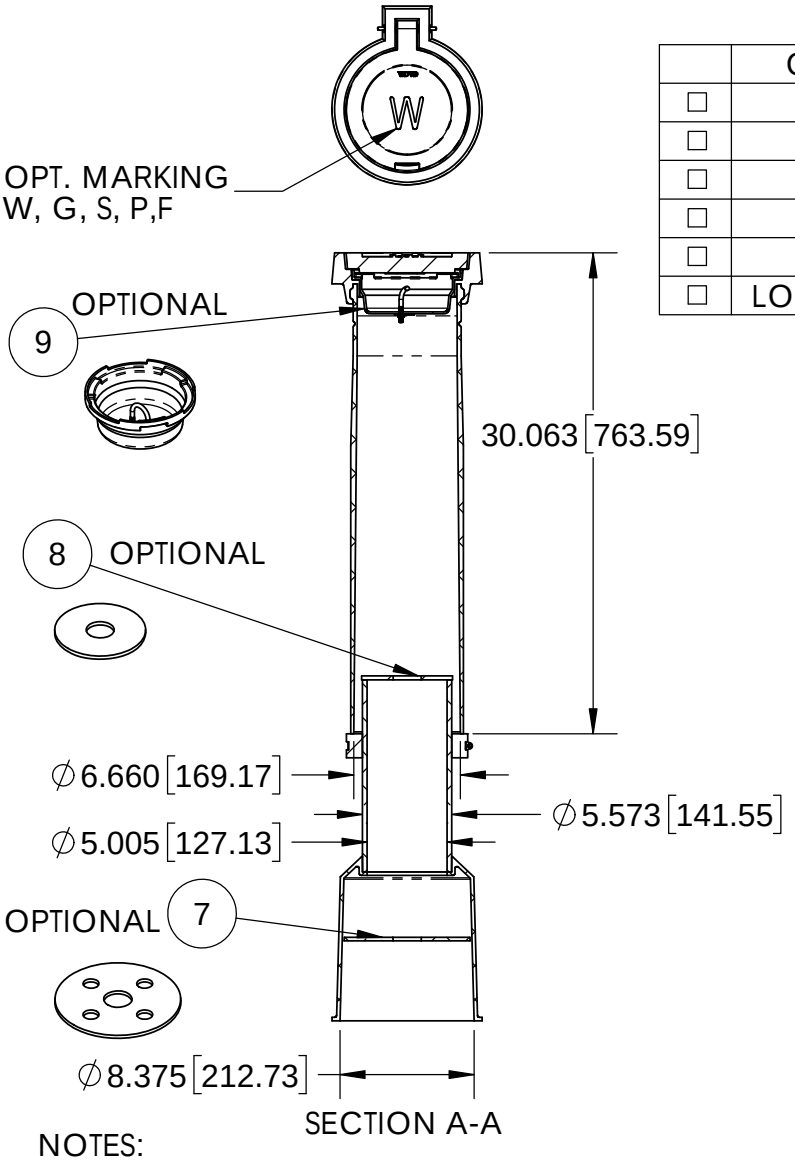

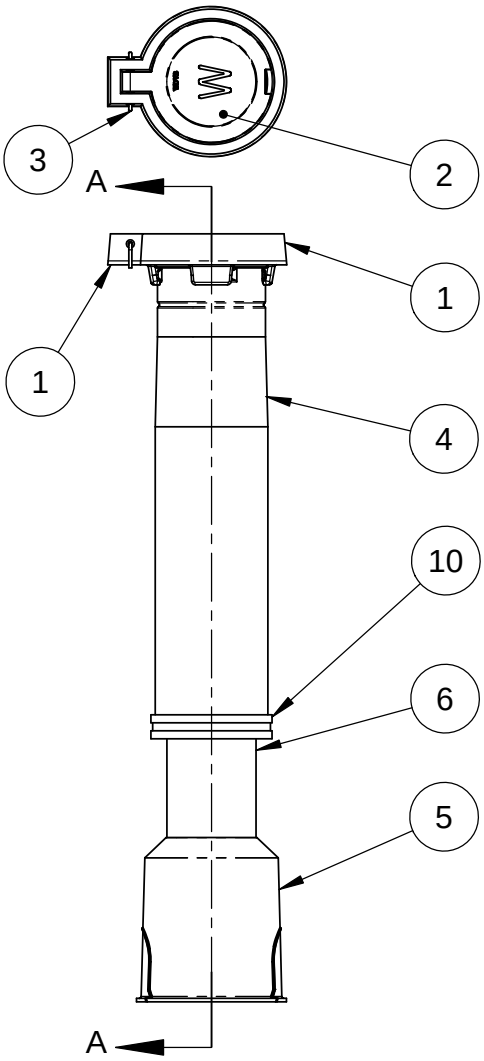

NOTES:
1. TOP SOCKET AND LID FINISH IS BLACK BITUMINOUS ASPHALT CORROSION RESISTANT COATING.
2. BURY AS REQUIRED. UP TO 20'LGTH MAY BE SUPPLIED AS ONE PIECE.

REV.	DESCRIPTION	APPROVED	DATE
3	NOTES ADDED		APR 18/16
2	OPTIONAL LID MARKING ADDED		MAR 30/16
1	OPTIONAL COMPONENTS ADDED		AUG 21/14
0	ISSUED FOR REVIEW		DEC 30/11

	NAME	DATE
DRAWN	MB	DEC 30/11
CHECKED		

TOLERANCES UNLESS SPECIFED

FRACTIONAL	± 1/32"
TWO PLACE DECIMAL	± .02"
THREE PLACE DECIMAL	± .002"
ANGULAR	± 1°
DIMENSIONS	INCHES

SCALE 1:12 SHEET 1 OF 1

WD Industrial Group
1036 Waverly Street
Winnipeg, Manitoba, Canada R3T 0P3
P 204 896 1333 F 204 896 6969

SIZE	DWG. NO.	REV.
A	WD82 PI Valve Box	3